Full marks are not necessarily awarded for a correct answer with no working. Answers must be supported by working and/or explanations. In particular, solutions found from a graphic display calculator should be supported by suitable working, e.g. if graphs are used to find a solution, you should sketch these as part of your answer. Where an answer is incorrect, some marks may be given for a correct method, provided this is shown by written working. You are therefore advised to show all working.

SECTION A

*Answer **all** questions in the boxes provided. Working may be continued below the lines if necessary.*

1. *[Maximum mark: 6]*

The first three terms of an arithmetic sequence are 36, 40, 44, ….

(a) (i) Write down the value of d.

(ii) Find u_8. *[3 marks]*

(b) (i) Show that $S_n = 2n^2 + 34n$.

(ii) Hence, write down the value of S_{14}. *[3 marks]*

$d = 4$ $\quad U_n = U_1 + (n-1)d$

$U_8 = 36 + (8-1)4$

$U_8 = 36 + 7 \cdot 4$

$U_8 = 36 + 28$

$U_8 = 64$

$S_n = n/2 (U_1 + U_n)$

$S_n = n/2 (36 + (36 + (n-1)4))$

$S_n = n/2 (72 + 4n - 4)$

$S_n = n/2 (68 + 4n)$

$S_n = 34n + 2n^2$

$S_{14} = 34(14) + 2(14)^2 = 868$

2. *[Maximum mark: 7]*

Let $f(x) = 2x^2 - 8x - 9$.

(a) (i) Write down the coordinates of the vertex.

(ii) Hence or otherwise, express the function in the form $f(x) = 2(x-h)^2 + k$. *[4 marks]*

(b) Solve the equation $f(x) = 0$. *[3 marks]*

X of vertex: $-b/2a$ $\quad -(-8)/2(2) = 8/4 = 2$

$f(2) = 2(2)^2 - 8(2) - 9$

$8 - 16 - 9 = -17$

$(2, -17)$

$2(x-2)^2 - 17$

$0 = 2x^2 - 8x - 9$

-18

want factor $= -8$

$\frac{-b \pm \sqrt{b^2 - 4ac}}{2a}$

$\frac{8 \pm \sqrt{64 - 4(2)(-9)}}{4} = \frac{8 \pm \sqrt{64 + 72}}{4}$ $\quad \boxed{\frac{8 \pm \sqrt{136}}{4}}$

4. *[Maximum mark: 7]*

The graph of $y = (x-1)\sin x$, for $0 \le x \le \frac{5\pi}{2}$, is shown below.

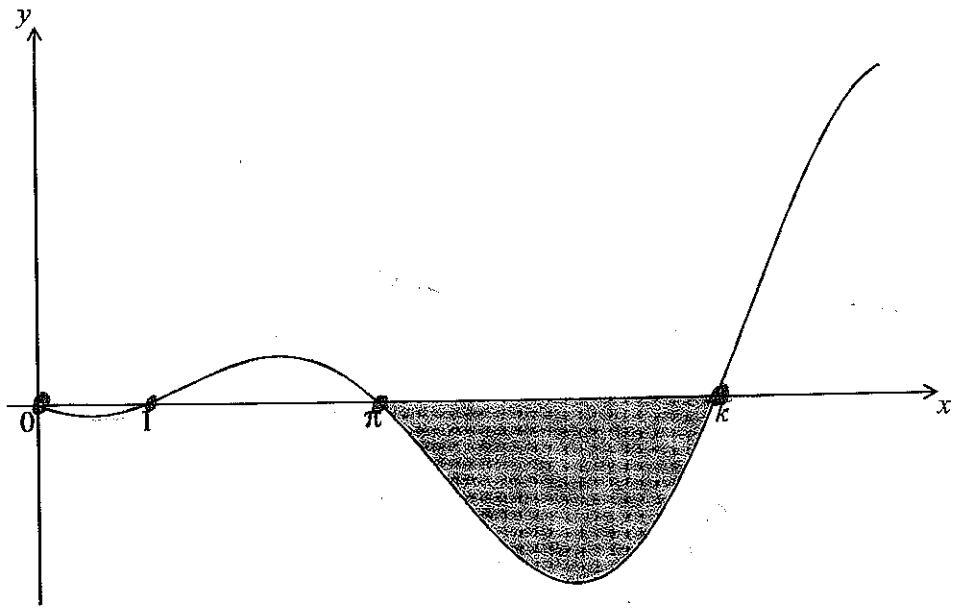

The graph has x-intercepts at 0, 1, π and k.

(a) Find k. *[2 marks]*

The shaded region is rotated 360° about the x-axis. Let V be the volume of the solid formed.

(b) Write down an expression for V. *[3 marks]*

(c) Find V. *[2 marks]*

$0 = (x-1)\sin x$ $\quad x-1=0$ $\quad \sin x = 0$

$x = 1$ ✓ $\quad x = \pi + k2\pi$

$k = 2\pi$ $\quad = 2\pi + k2\pi$

$\pi \int_{\pi}^{2\pi} [(x-1)\sin x]^2 \, dx$ — Paper 2 – in calc!

22.15π or 69.6

6. *[Maximum mark: 6]*

Consider the expansion of $\left(2x^3+\frac{b}{x}\right)^8 = 256x^{24}+3072x^{20}+\ldots+kx^0+\ldots$.

(a) Find b. *[3 marks]*

(b) Find k. *[3 marks]*

$\binom{8}{1}2^7 b^1 = 3072$

$8 \cdot 128 \cdot b = 3072$

$b = 3$

$\binom{8}{8}(2x^3)^0(b)^8$

$k = 6561$

7. *[Maximum mark: 7]*

The probability of obtaining "tails" when a biased coin is tossed is 0.57. The coin is tossed ten times. Find the probability of obtaining

(a) **at least** four tails; *[4 marks]*

(b) the fourth tail on the tenth toss. *[3 marks]*

1 − binomcdf(10, .57, 3) ≈ .919

binompdf(9, .57, 3) × .57 ≈ .056

prob of 3 in 1st 9

*Do **NOT** write solutions on this page.*

SECTION B

*Answer **all** questions on the answer sheets provided. Please start each question on a new page.*

8. *[Maximum mark: 13]*

The histogram below shows the time T seconds taken by 93 children to solve a puzzle.

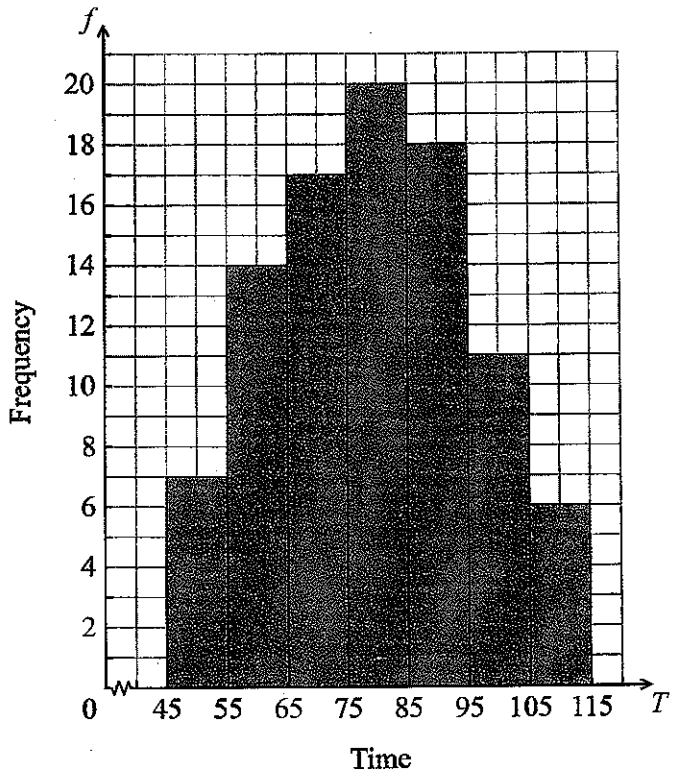

The following is the frequency distribution for T.

Time	$45 \le T < 55$	$55 \le T < 65$	$65 \le T < 75$	$75 \le T < 85$	$85 \le T < 95$	$95 \le T < 105$	$105 \le T < 115$
Frequency	7	14	p	20	18	q	6

(a) (i) Write down the value of p and of q. $q = 11$ $p = 17$

(ii) Write down the median class. 75 - 85 *[3 marks]*

(b) A child is selected at random. Find the probability that the child takes less than 95 seconds to solve the puzzle. *[2 marks]*

76/93 .817

(This question continues on the following page)

*Do **NOT** write solutions on this page.*

(Question 8 continued)

Consider the class interval $45 \le T < 55$.

(c) (i) Write down the interval width. 10

(ii) Write down the mid-interval value. 50 *[2 marks]*

(d) Hence find an estimate for the

(i) mean; $= 79.1$

(ii) standard deviation. $\sigma = 16.4$ *[4 marks]*

John assumes that T is normally distributed and uses this to estimate the probability that a child takes less than 95 seconds to solve the puzzle.

(e) Find John's estimate. *[2 marks]*

$P(X \le 95) = .833$

*Do **NOT** write solutions on this page.*

9. *[Maximum mark: 15]*

The following diagram shows a triangle ABC.

(b) $36 = 10.4p^2$

$3.46 = p^2$

$p = \pm\sqrt{3.46}$

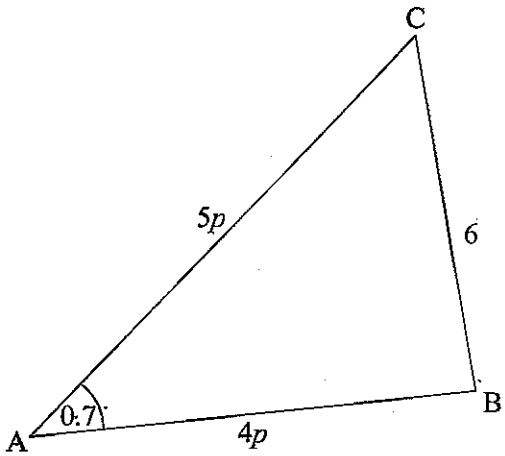

$BC = 6$, $C\hat{A}B = 0.7$ radians, $AB = 4p$, $AC = 5p$, where $p > 0$.

Cosine Rule

(a) (i) Show that $p^2(41 - 40\cos 0.7) = 36$.

$36 = (4p)^2 + (5p)^2 - 2(4p)(5p)\cos .7$

$36 = 16p^2 + 25p^2 - 40p^2(\cos .7)$

$36 = 41p^2 - 40p^2\cos .7$

$36 = p^2(41 - 40\cos .7)$

(ii) Find p. *[4 marks]*

Consider the circle with centre B that passes through the point C. The circle cuts the line CA at D, and $A\hat{D}B$ is obtuse. Part of the circle is shown in the following diagram.

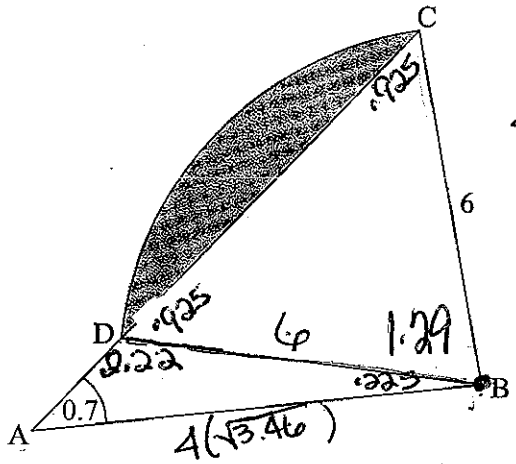

$\frac{\sin\theta}{4(\sqrt{3.46})} = \frac{\sin .7}{6}$

$23.22 - \frac{1}{2}(6)(6)\sin(1.29)$

$\boxed{5.93}$

(b) Write down the length of BD. $= 6$ *[1 mark]*

(c) Find $A\hat{D}B$. $.925$ *[4 marks]*

(d) (i) Show that $C\hat{B}D = 1.29$ radians, correct to 2 decimal places.

$\pi - 2(.925) = 1.29$ ✓

(ii) Hence, find the area of the shaded region. *[6 marks]*

$\frac{x}{1.29} = \frac{\pi(6)^2}{2\pi} = 23.22 = x$

*Do **NOT** write solutions on this page.*

10. *[Maximum mark: 17]*

The following diagram shows two ships A and B. At noon, ship A was 15 km due north of ship B. Ship A was moving south at 15 km h^{-1} and ship B was moving east at 11 km h^{-1}.

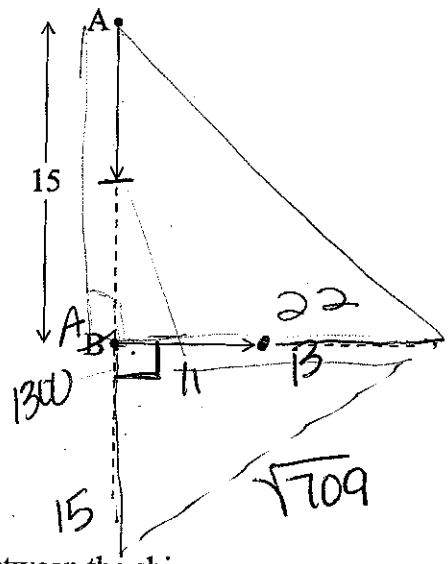

(a) Find the distance between the ships

(i) at 13:00; 11 Km

(ii) at 14:00. √709 *[5 marks]*

Let $s(t)$ be the distance between the ships t hours after noon, for $0 \le t \le 4$.

(b) Show that $s(t) = \sqrt{346t^2 - 450t + 225}$. *[6 marks]*

(c) Sketch the graph of $s(t)$. — paper 2 so graph on GDC then sketch making sure of critical points *[3 marks]*

(d) Due to poor weather, the captain of ship A can only see another ship if they are less than 8 km apart. Explain why the captain cannot see ship B between noon and 16:00. *[3 marks]*

use graph to show closest point

$A = \begin{pmatrix} 15 \\ 0 \end{pmatrix} + t\begin{pmatrix} -15 \\ 0 \end{pmatrix}$ $B = \begin{pmatrix} 0 \\ 0 \end{pmatrix} + t\begin{pmatrix} 0 \\ 11 \end{pmatrix}$

$d = \sqrt{(15-15t)^2 + (11t)^2}$

$\sqrt{225 - 450t + 225t^2 + 121t^2}$

$\sqrt{346t^2 - 450t + 225}$

$$\underline{2Kx^2 - 4Kx + 1}$$

$$= 2$$

$$16K^2 - 8K = 0$$

$$8K(2K - 1) = 0$$

$$K = 0 \text{ or } K = \frac{1}{2}$$

$$2\tfrac{1}{2}x^2 - 4(\tfrac{1}{2})x + 1$$

$$x^2 - 2x + 1$$

$$\frac{-b}{2a} = \frac{2}{2} = \underline{1}$$